WERKSTATT-01

ASSEMBLY INSTRUCTIONS

Visit moogmusic.com/werkstatt for video assembly and calibration instructions.

PARTS LIST

A) Werkstatt-01 printed circuit board (PCB) ..... x 1

B) Bottom chassis (metal) ..... x 1

C) Top panel with silkscreened printing (metal) ..... x 1

D) 12-Volt DC power adapter ..... x 1

E) Hardware kit containing:

- a. Keyboard button caps ..... x 13
- b. 1/4" Sheet metal screws (black) ..... x 4
- c. 1/4" Pan head machine screws (silver) ..... x 5
- d. Sheet metal screws for CV Expander (silver/pointed tip) ..... x 2
- e. Black nylon washer ..... x 1
- f. Black nylon hex nut ..... x 1
- g. Rubber feet ..... x 4
- h. Patchable header cables ..... x 5

F) Serial number label ..... x 1

1. ATTACHING THE FEET

Attach the four **RUBBER FEET** by pushing them into the holes of the **BOTTOM CHASSIS** and gently twisting.

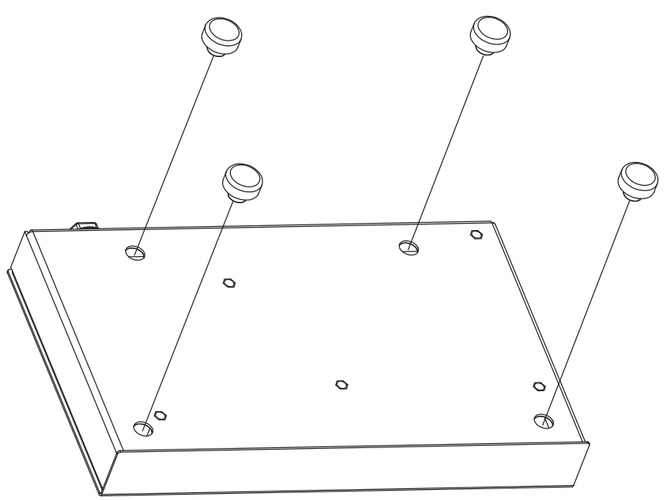

2. INSTALLING THE ELECTRONICS

Carefully remove the **PRINTED CIRCUIT BOARD** from the protective sleeve. Take the **BLACK NYLON WASHER** and slide it onto the audio output jack *(fig. A)*.

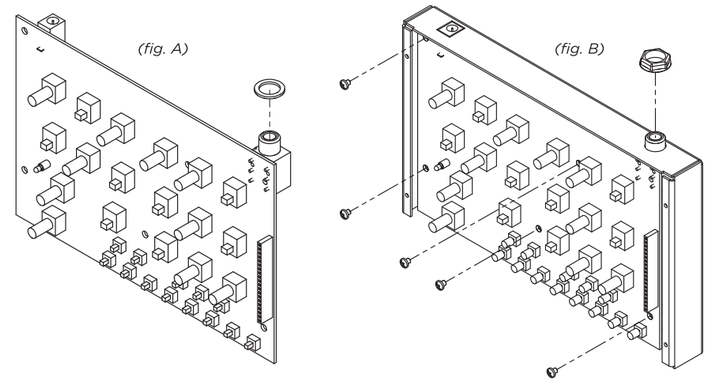

Next, place the **PRINTED CIRCUIT BOARD** into the **BOTTOM CHASSIS.** Slide the audio jack through the jack hole, and be sure the five mounting holes in the **PRINTED CIRCUIT BOARD** line up with the standoffs on the **BOTTOM CHASSIS.** Using the silver **PAN HEAD MACHINE SCREWS** (x5), loosely attach the **PRINTED CIRCUIT BOARD** to the chassis. Take a moment to make sure everything is lined up neatly and correctly—including the power input jack—and then go ahead and tighten the screws. Finally, place the **BLACK NYLON HEX NUT** on the audio jack, and hand-tighten the nut to hold the jack securely to the **BOTTOM CHASSIS** *(fig. B)*.

3. POWER/LED TEST & KEYBOARD

Using only the included power supply, connect the barrel end to the power supply input of your Werkstatt-01; connect the other end to an AC wall outlet (100-240 Volts AC/50-60 Hz). At this point, the red LED on the front panel (LFO) should begin blinking. If it does, you're ready to move on.

Unplug the power supply from the Werkstatt-01 before proceeding.

Place the 13 button caps on the keyboard buttons.

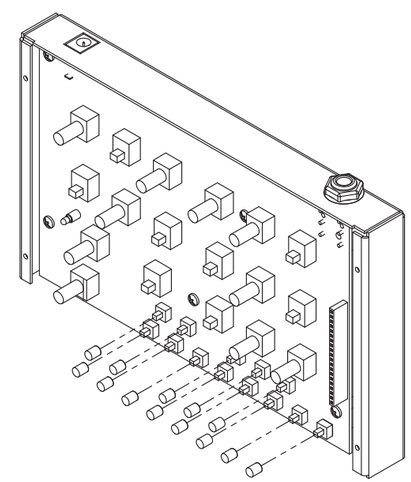

4. ADDING THE TOP PANEL

Place the **TOP PANEL** in position so that all of the knobs, switches, and keyboard buttons pass through the corresponding holes. Secure the **TOP PANEL** using the **BLACK SHEET METAL SCREWS.**

NOTE: *Leave out the screws on the right side if you plan to install the CV Expander (Refer to CV Expander Installation Guide for instructions).*

The screw holes in the **TOP PANEL** should line up with the screw holes in the **BOTTOM CHASSIS.**

NOTE: *Tightening these screws may require a little extra effort the first time.*

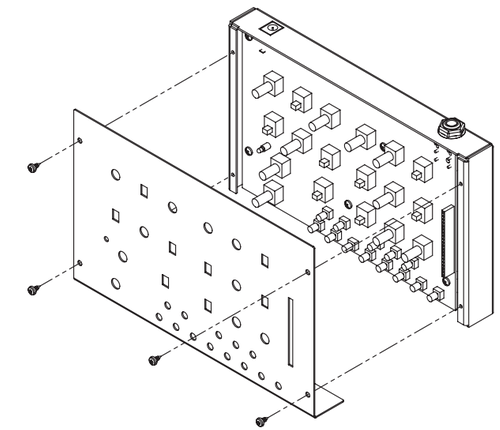

5. APPLYING THE SERIAL NUMBER LABEL

Lastly, peel the serial number label sticker from its backing paper and apply it to the back of your Werkstatt-01. You are now ready to write your name in the *Built By* section of the serial number label, connect the power supply, and begin exploring your new synthesizer!

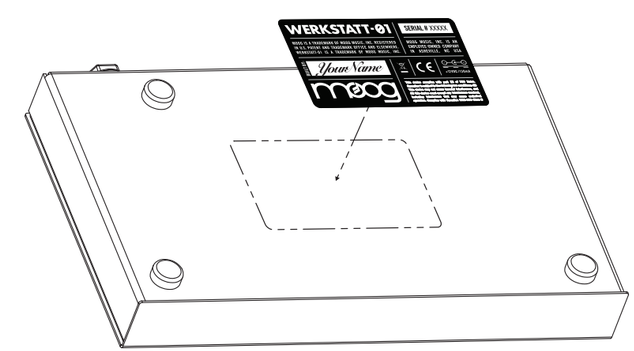

HAVE QUESTIONS OR COMMENTS?

Reach out via live chat at www.moogmusic.com and we'll be here for you.

WERKSTATT-01

QUICK START

To learn more about your Werkstatt-01 analog synthesizer, download the manual at WWW.MOOGMUSIC.COM/WERKSTATT

VCO

A single Voltage Controlled Oscillator (VCO) with two selectable waveforms is Werkstatt's primary source of sound.

FREQ - The **FREQUENCY** knob sets the pitch of the VCO. Its range is +9 octaves.

WAVE - Saw and pulse waveforms are available on the Werkstatt. Each carries distinct harmonic content, or timbre. When set to **SAW**, the **PWM** knob is disabled.

PWM - The **PULSE WIDTH MODULATION (PWM)** knob can be used to determine the width of the pulse wave, thereby changing the timbre of the wave.

VCO MOD

Oscillator modulation is a way of creating everything from subtle pitch vibrato, to chorus-like sounds and metallic and harsh effects.

SOURCE - The **SOURCE** switch determines which modulation source will be applied to the oscillator. ***EG:*** The **ATTACK**, **SUSTAIN**, and **DECAY** characteristics of the **ENVELOPE GENERATOR** will be used as the VCO modulation source. ***LFO:*** The Low Frequency Oscillator (LFO) will be used as the VCO modulation source.

AMOUNT - The **AMOUNT** knob is used to control the depth of the modulation.

DEST - The **DESTINATION** switch determines which control will be affected by the chosen modulation source. With this switch set to PWM, the **PWM** knob is disabled. ***PWM:*** The modulation source is used to continually vary the width of the pulse wave. The **VCO WAVE** switch must be set to **PULSE**. ***FREQ:*** The modulation source is used to continually vary the pitch of the oscillator.

LFO

The Low Frequency Oscillator (LFO) creates a cyclical modulation source that can be used to add a repeating change to any modulation destination.

RATE - This controls the speed, or frequency, of the LFO. The LED flashes once for every wave cycle, displaying the LFO speed.

WAVE - This switch allows you to select the waveform of the LFO. ***SQUARE:*** The LFO will alternate directly between two distinct values representing the upper and lower limits of the wave. ***TRIANGLE:*** This creates a continuously changing value that sweeps between the upper and lower limits of the wave.

KBD - The keyboard (KBD) features one octave of round buttons as opposed to traditional keys, but the layout is the same. If more than one note is played at a time, the lowest note will be played.

GLIDE - This determines the time it takes to make a smooth pitch transition from one note to another note.

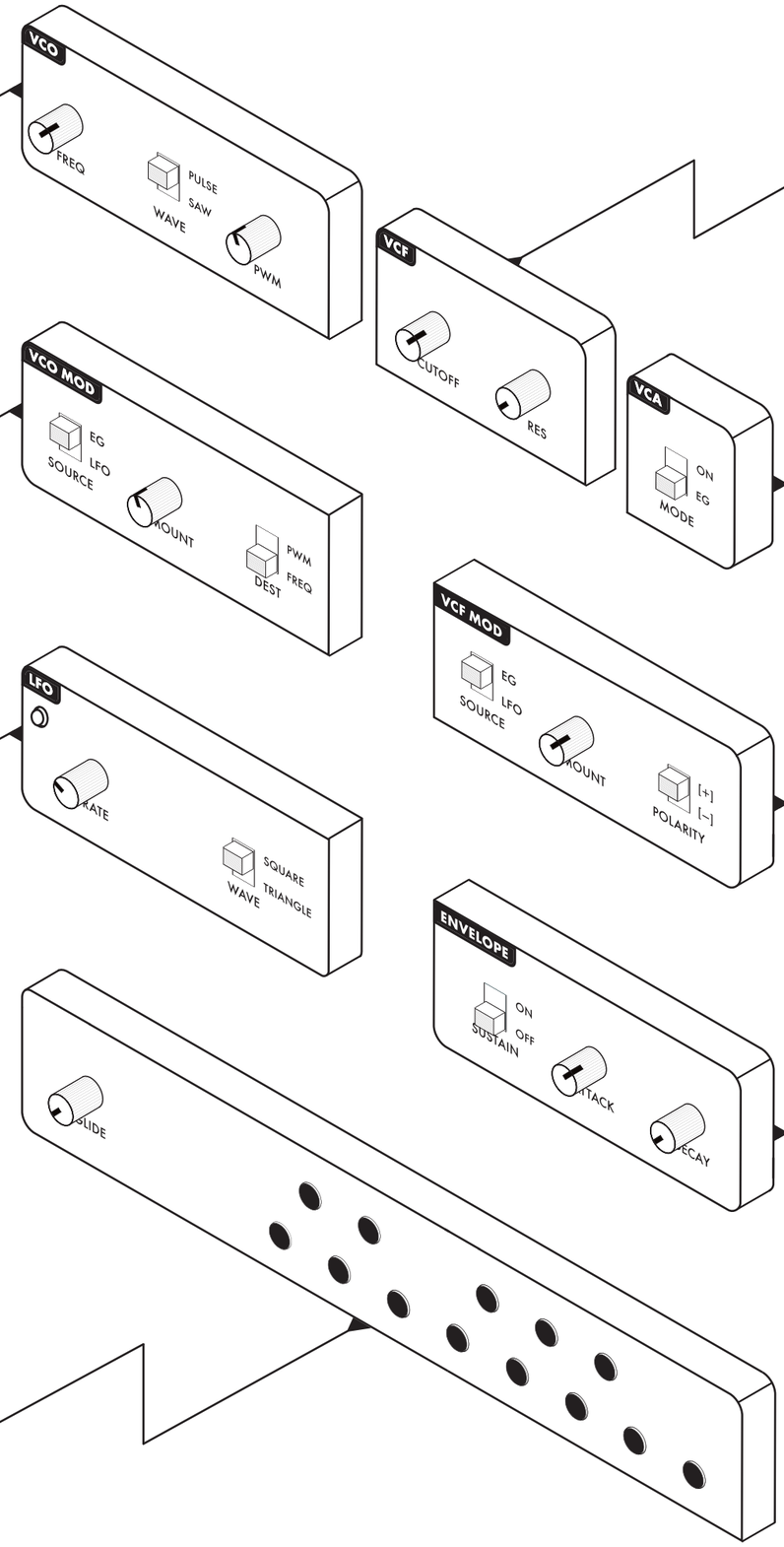

VCF

The Voltage Controlled Filter (VCF) is a classic 24dB per octave Moog ladder filter, which shapes sound by attenuating and/or emphasizing certain harmonic elements.

CUTOFF - The **CUTOFF** knob specifies the frequency at which the Filter begins to attenuate sound.

RES - The **RESONANCE** knob determines the amount of harmonic emphasis applied to the filter cutoff frequency.

VCA

The Voltage Controlled Amplifier (VCA) determines the output level of the Werkstatt-01. Its source is determined by the Mode switch.

MODE - The VCA can function in one of two ways, selected by the Mode switch. ***ON:*** The audio signal of the Werkstatt will output, or drone continuously. ***EG:*** The audio output level is controlled by the Attack, Sustain, and Decay characteristics of the Envelope Generator Module.

VCF MOD

Filter modulation changes the value of the filter's cutoff frequency.

SOURCE - The **SOURCE** switch determines which modulation source will be applied to the filter cutoff. ***EG:*** The **ATTACK**, **SUSTAIN**, and **DECAY** characteristics of the **ENVELOPE GENERATOR** will be used as the VCF modulation source. ***LFO:*** This will be used as the VCF modulation source.

AMOUNT - The **AMOUNT** knob is used to control the depth of the modulation.

POLARITY - When EG is the modulation source, its polarity can be inverted. This allows the envelope **ATTACK** to lower the filter cutoff frequency Instead of boosting it. **[+]:** Normal Polarity **[-]:** Invert Polarity.

ENVELOPE

Each time a key is pressed, the **ENVELOPE GENERATOR** produces control voltages that allow you to change the value of certain parameters over time.

SUSTAIN - This determines how the **SUSTAIN** segment of the **ENVELOPE GENERATOR** will work when a note is held. ***ON:*** The envelope will continue to sustain as long as the keyboard key is being held. This results in an organ-like behavior. ***OFF:*** The Envelope will advance directly from the **ATTACK** stage to the **DECAY** stage. This results in a plucked sound.

ATTACK - This determines the time it takes for the **ENVELOPE GENERATOR** to reach its maximum level after a key is pressed.

DECAY - This determines the time it takes for the **ENVELOPE GENERATOR** to reach its lowest level after the key is released, or after the attack segment is complete.

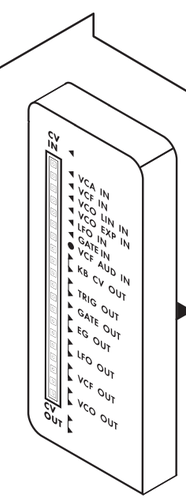

PATCHABLE HEADER - This allows control signals generated by the Werkstatt-01 to be easily routed to the control inputs of the VCO, VCF, VCA, and LFO. The patch wires included with the Werkstatt are designed to make the most of these patch points.